Door Controller Smart

Single Door

ACCESS CONTROL UNIT FOR A SINGLE ELECTRIFIED LOCK VIA A DEDICATED RELAY, WITH DOOR STATUS MONITORING, CONNECTABLE TO 1 READER VIA RS485 CABLE.





Complete control of an electrified access point

The Door Controller Smart enables access control for a single electrified lock through a dedicated relay for the door lock, making it suitable for a wide range of applications.

Easy to install, ready to use

The Door Controller Smart is designed for quick and easy installation. For proper operation, it is sufficient to connect it to a 1NCA Standard or 1NCA Mullion 485 reader via a wired RS485 connection. Configuration is fast and intuitive: no specific programming is required, as the controller automatically recognises the connected reader.

Product features

- Door status sensor that detects whether the door is open or closed, providing precise and constant control of the door status
- Allows the opening of electric doors, motorised gates, or any electrical actuator that can be activated by closing a contact
- REX (REquest to eXit) is an opto-isolated input that allows relay activation via an exit button located up to 100 m away
- Real Time Clock/Calendar
- Manages one 1NCA Reader for access control

Door Controller Smart Single Door

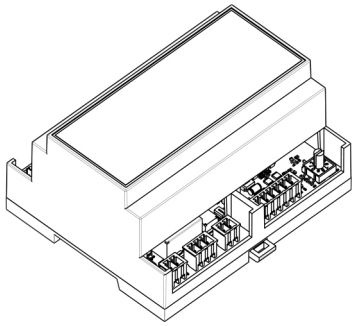

DIMENSIONS
- Height: 90 mm
- Depth: 58 mm
- Width: 106 mm (6 DIN modules)

MATERIAL
Technopolymer

COLOUR
White

cod. **5E2515**

COMMUNICATION INTERFACE

- RS485

CERTIFICATIONS

- Compliance with European and UK EMC directives
- EN IEC 61000-6-3: Electromagnetic Compatibility (EMC)
- EN IEC 61000-6-1: Electromagnetic Compatibility (EMC)
- EN IEC 62368-1: Audio/video, information and communication technology

Technical features

FIRMWARE
ARGO

POWER UNIT
12÷24 Vac (max. 15W)

HARDWARE SPECIFICATIONS
INPUTS:
REX Open Command (Request to Exit): internal opening command
Door Contact: door sensor indicating whether the door is open or closed
AUX Input Contact (RFU*)
Tamper (RFU*)

OUTPUTS:
Door Lock RELAY (COM NO NC): supports both fail-safe and fail-secure locking devices
Booster: enables the operation of an electric lock with solenoid; activated in parallel with the Door Lock RELAY
AUX RELAY (RFU*)

*RFU = Reserved for Future Use

PRODUCT COMPATIBILITY
For proper operation, the Smart Door Controller must always be equipped with either a 1NCA Smart Standard reader or a 1NCA Smart Mullion 485 reader.
The device supports 1 reader

MOUNTING

- DIN Rail 35 mounted

WORKING TEMPERATURE
-20°C ÷ +60°C

STORAGE TEMPERATURE
-20°C ÷ +70°C

PACKAGE
- 1 Smart Door Controller - 1 Connector Kit - 1 Installation Guide

Compatibility with ISEO applications

ARGO	LUCKEY	LSA	V364
●	●	-	-